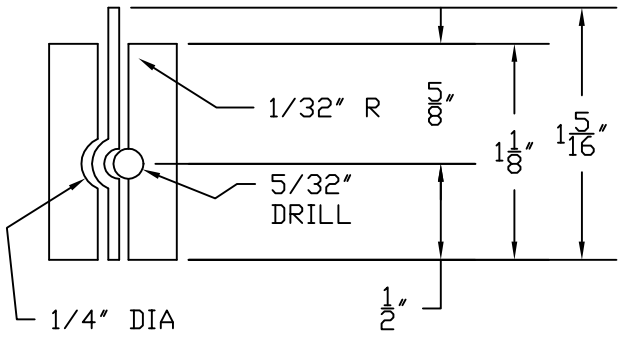

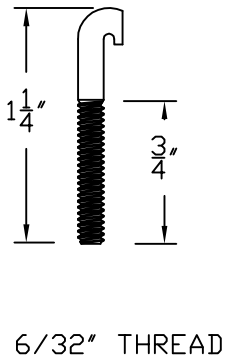

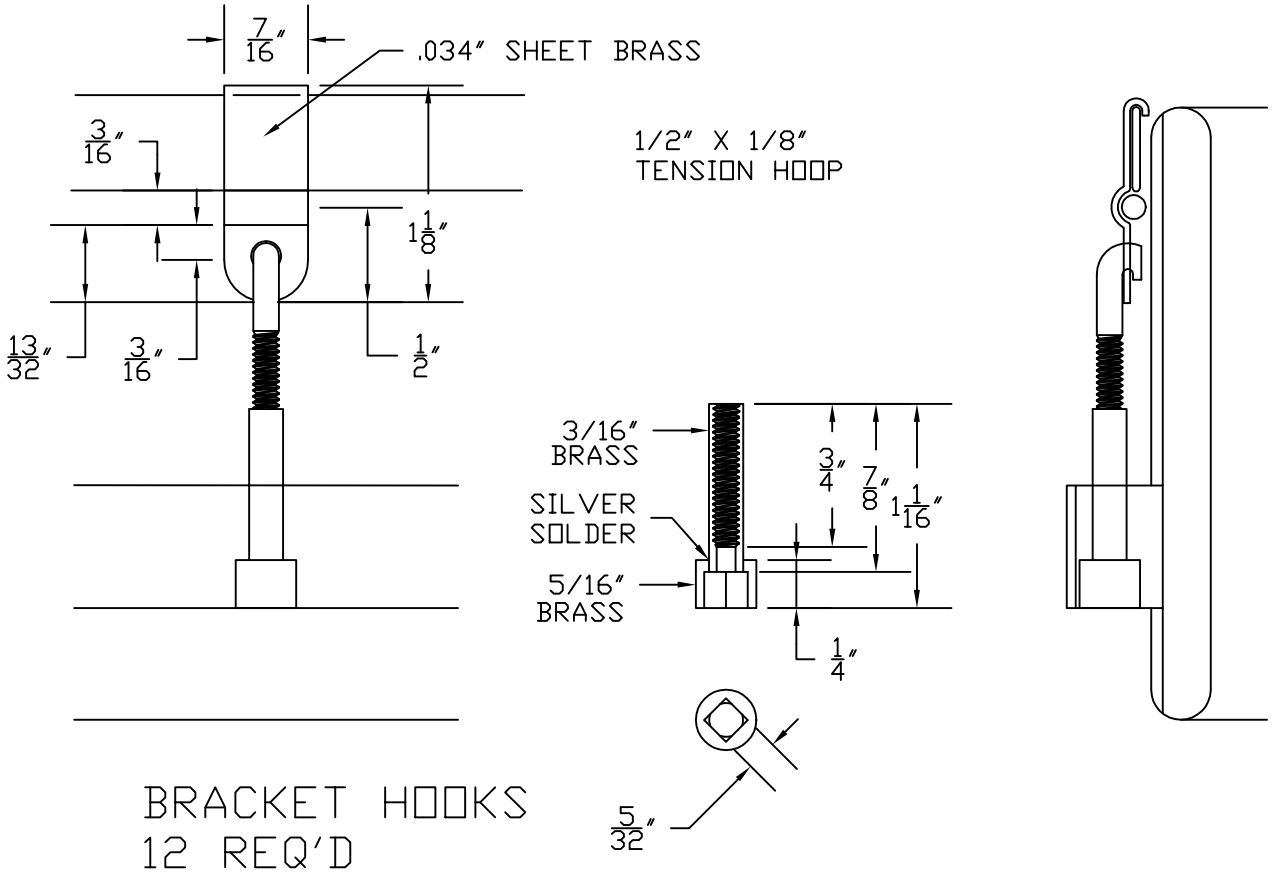

BRACKET HOOKS
12 REQ'D

Drawn by Chuck Chandler, 2014
All rights reserved
Dimensions in inches
Drawn to scale, print 8-1/2″x11″